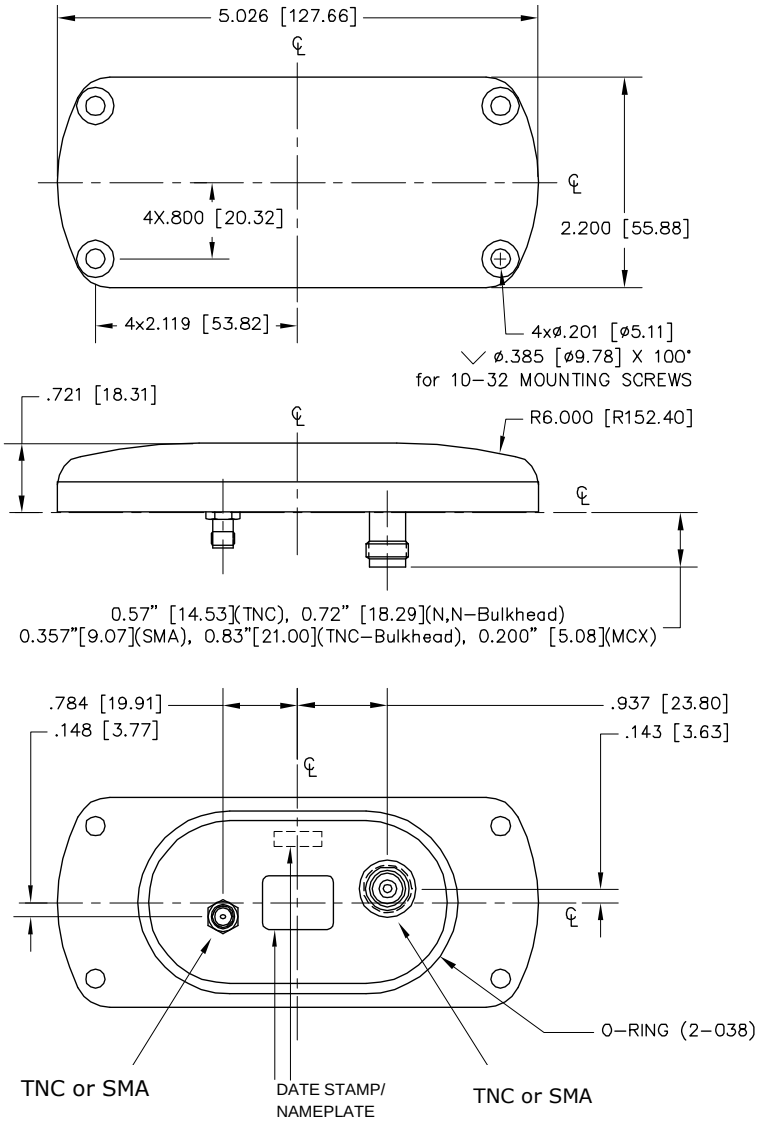NOTE: All dimensions are in inches [mm]